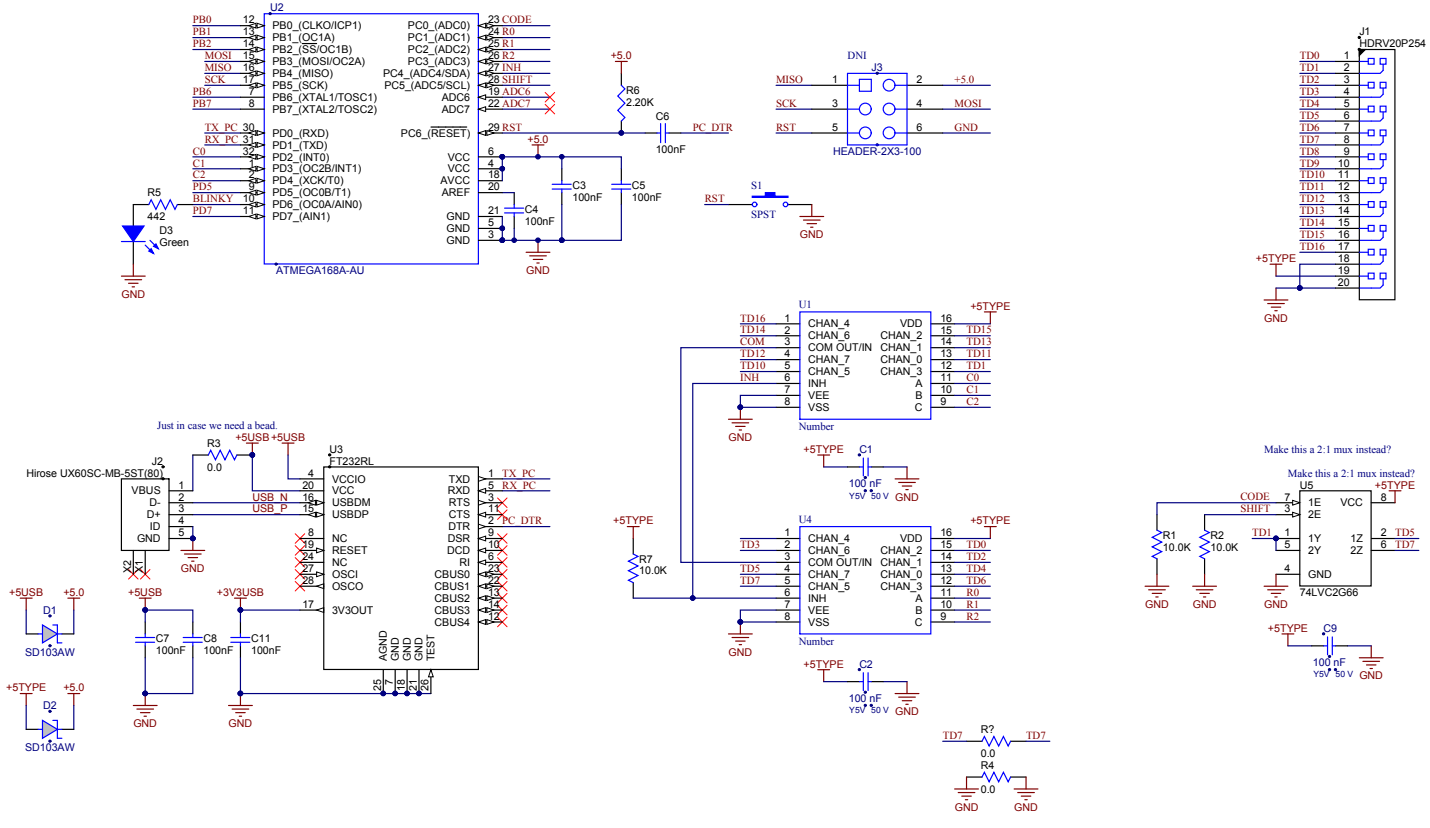Teleprinter Rev 2
Steven Shamlian
May 9, 2013